ALL ANGLES ARE PERPINDICULAR UOS
IF IN DOUBT ASK

FOR INFO ONLY
DIMENSIONS ARE SUBJECT TO
CHANGE WITHOUT NOTICE

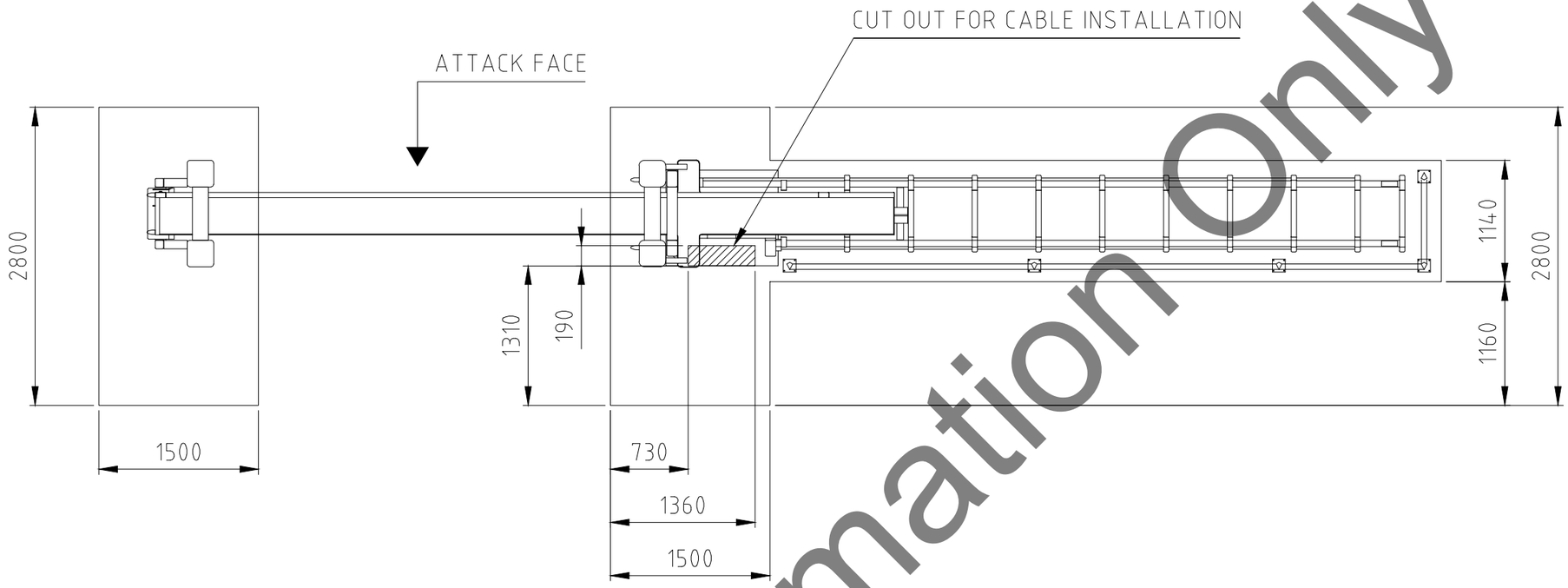

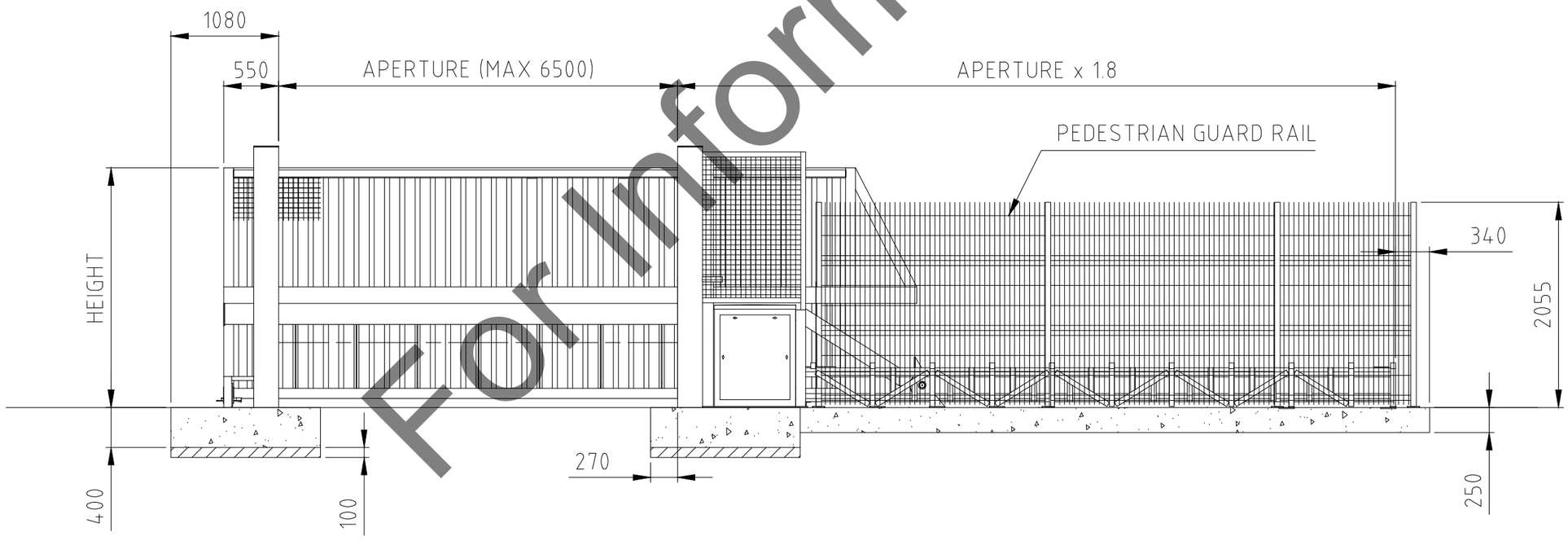

CONSULT DESIGN OFFICE IF ROADWAY IS NOT LEVEL TO ±10mm

For Information Only

ISSUE	DRAWN	CHK'D	APP'D	C/N
DATE	CHANGE			
ISSUE	DRAWN	CHK'D	APP'D	C/N
DATE	CHANGE			
ISSUE	DRAWN	CHK'D	APP'D	C/N
DATE	CHANGE			
ISSUE	DRAWN	CHK'D	APP'D	C/N
DATE	CHANGE			
ISSUE	DRAWN	CHK'D	APP'D	C/N
DATE	CHANGE			
ISSUE	DRAWN	CHK'D	APP'D	C/N
DATE	CHANGE			
ISSUE	DRAWN	CHK'D	APP'D	C/N
DATE	CHANGE			
ISSUE 3	DRAWN FN	CHK'D AL	APP'D GL	C/N 6897
DATE 24/01/14	CHANGE ADDED RIGHT HAND VERSION			
ISSUE 2	DRAWN FN	CHK'D AJL	APP'D GL	C/N 6831
DATE 24/01/14	CHANGE ADDED DUCT LOCATION			

MATERIAL | FINISH

DIMENSIONS IN MILLIMETERS

SCALE NTS | TOLERANCES ±10mm UOS

3RD ANGLE PROJECTION

THE INFORMATION CONTAINED IN THIS DRAWING IS CONFIDENTIAL AND MAY NOT BE PASSED IN WHOLE OR IN PART TO THIRD PARTIES WITHOUT THE WRITTEN PERMISSION FROM FRONTIER-PITTS LTD.

APP'D	GL	DATE	01/11/2012
CHK'D	GL	DATE	01/11/2012
DRAWN	AJL	DATE	01/11/2012

FRONTIER PITTS

FRONTIER–PITTS LTD
CROMPTON HOUSE, CROMPTON WAY,
CRAWLEY, WEST SUSSEX. RH10 9QZ
ENGLAND
Telephone :- 44 (0) 1293 548301
Fax :- 44 (0) 1293 560650
e-mail: contracts@frontierpitts.com
web site: www.frontierpitts.com

CONTRACTOR
SALES

SITE
ATSG-u (LH VERSION)

TERRA CANTILEVER GATE

GENERAL LAYOUT/INSERT

DRAWING NUMBER 6061-00S | ISSUE 3