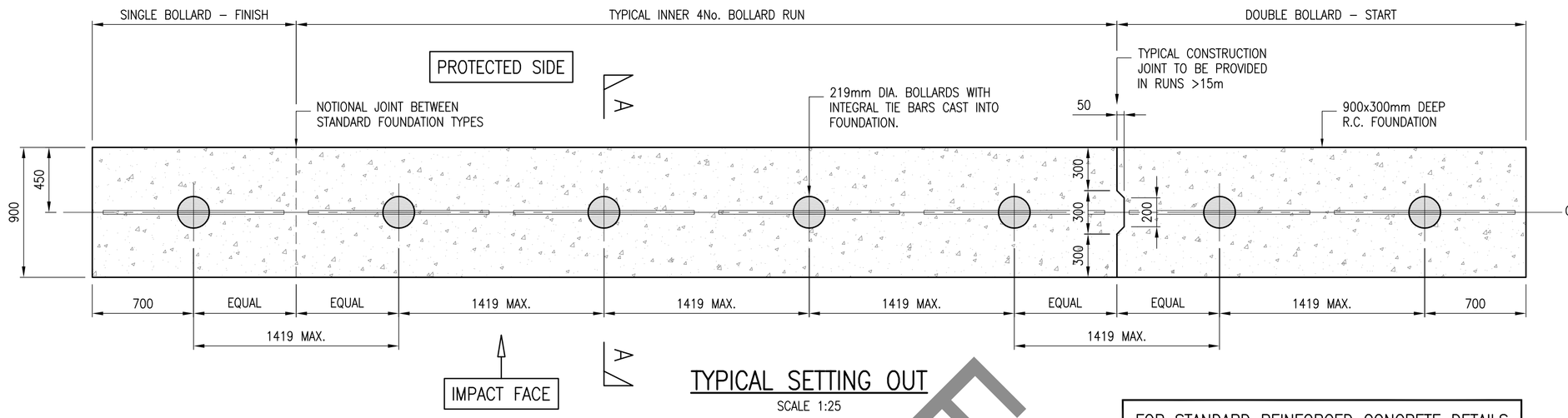


## TYPICAL SETTING OUT

SCALE 1:25

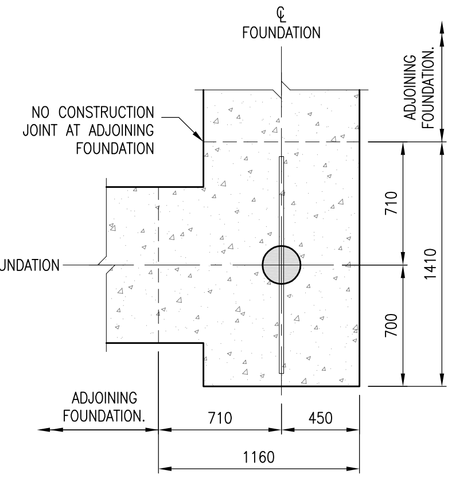


## 90° CORNER SETTING OUT

SCALE 1:25

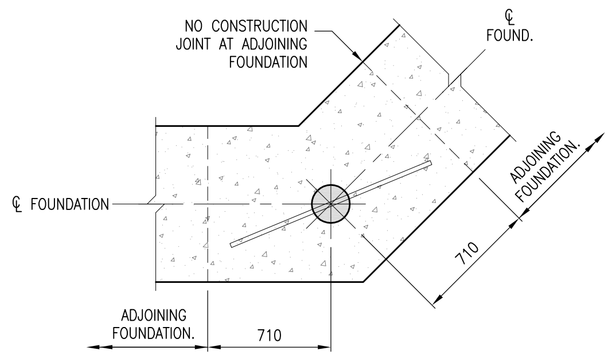


## 45° CORNER SETTING OUT

SCALE 1:25

FOR STANDARD REINFORCED CONCRETE DETAILS REFER TO DRAWING Nr. 3918/000/202

0 0.5 1 1.5 2 2.5m

SCALE BAR 1:25

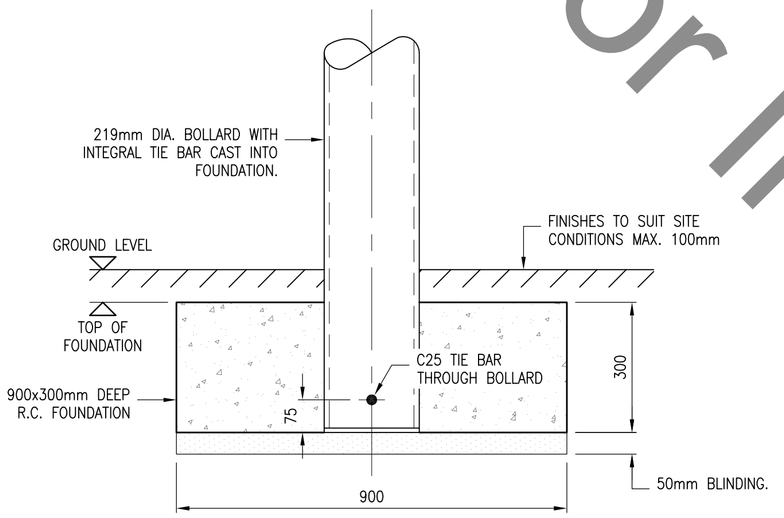


## TYPICAL SECTION A–A

SCALE 1:10

0 0.1 0.2 0.3 0.4 0.5 0.6 0.7 0.8 0.9 1m

SCALE BAR 1:10

## GENERIC BOLLARD ARRANGEMENTS

POSSIBLE ARRANGEMENTS FOR INFORMATION BUT NOT LIMITED TO THOSE SHOWN BELOW

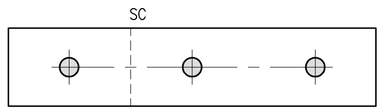


STRAIGHT 3Nr. BOLLARD ARRANGEMENT
1Nr. DOUBLE BOLLARD END
1Nr. SINGLE BOLLARD END
1Nr. SPLICE CONNECTION (SC)

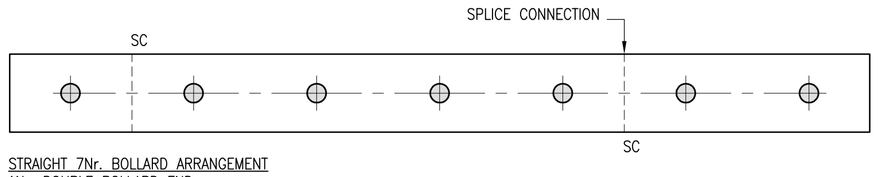


STRAIGHT 7Nr. BOLLARD ARRANGEMENT
1Nr. DOUBLE BOLLARD END
1Nr. INNER BOLLARD RUN
1Nr. SINGLE BOLLARD END
2Nr. SPLICE CONNECTIONS (SC)

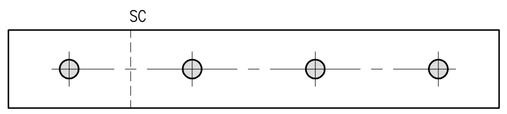


STRAIGHT 4Nr. BOLLARD ARRANGEMENT
1Nr. TRIPLE BOLLARD END
1Nr. SINGLE BOLLARD END
1Nr. SPLICE CONNECTION (SC)

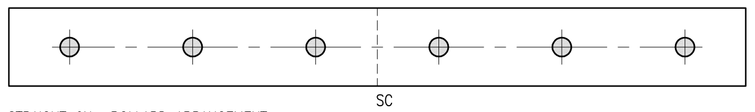


STRAIGHT 6Nr. BOLLARD ARRANGEMENT
1Nr. TRIPLE BOLLARD END
1Nr. TRIPLE BOLLARD END
1Nr. SPLICE CONNECTION (SC)

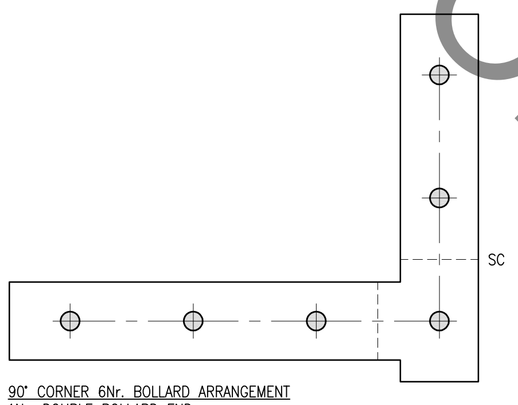


90° CORNER 6Nr. BOLLARD ARRANGEMENT
1Nr. DOUBLE BOLLARD END
1Nr. 90° CORNER
1Nr. TRIPLE BOLLARD END
1Nr. SPLICE CONNECTION (SC)

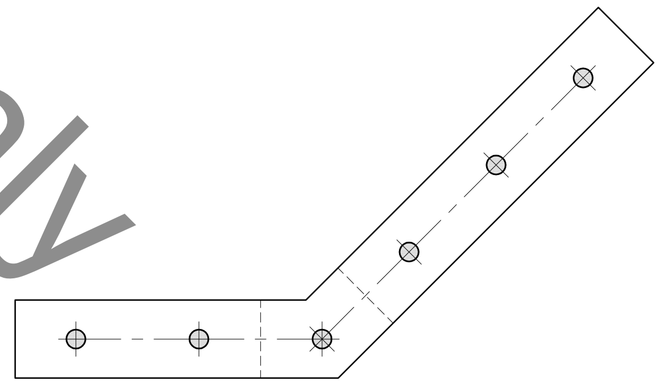

45° CORNER 6Nr. BOLLARD ARRANGEMENT
1Nr. TRIPLE BOLLARD END
1Nr. 45° CORNER
1Nr. DOUBLE BOLLARD END

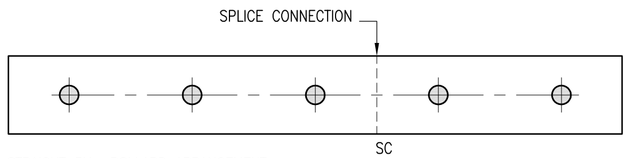


STRAIGHT 5Nr. BOLLARD ARRANGEMENT
1Nr. DOUBLE BOLLARD END
1Nr. TRIPLE BOLLARD END
1Nr. SPLICE CONNECTION (SC)

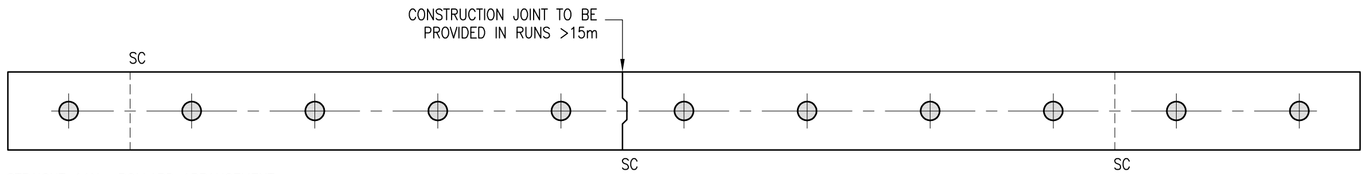


STRAIGHT 11Nr. BOLLARD ARRANGEMENT
1Nr. DOUBLE BOLLARD END
2Nr. INNER BOLLARD RUN
1Nr. SINGLE BOLLARD END
3Nr. SPLICE CONNECTION (SC)

0 1 2 3 4 5m

SCALE BAR 1:50

For Information Only

## NOTES

1. DO NOT SCALE FROM THIS DRAWING. ALL DIMENSIONS MUST DIMENSIONS MUST BE CHECKED AND VERIFIED ON SITE.
2. DETAILS ON THIS DRAWING ASSUMES A STRAIGHT AND LEVEL FOUNDATION RUN, IF THE PROPOSED LAYOUT REQUIRES A DIFFERENT LAYOUT THAN THAT PROVIDED ON THIS DRAWING CONTACT MFD INTERNATIONAL FOR ALTERNATIVE DESIGN SOLUTION.
3. STANDARD DETAILS TO BE COMBINED TO FORM APPROPRIATE Nr. OF BOLLARDS/RUN. ALL RUNS MUST HAVE THE APPROPRIATE STANDARD ENDS.
4. SEPARATE BENDING SCHEDULE MUST BE USED EACH TIME A SECTION IS REQUIRED E.G. FOR 2x "INNER 4Nr. BOLLARD RUN" USE 2x APPROPRIATE BENDING SCHEDULE.

EXCAVATION
- ALL EXCAVATIONS PREFERABLY TO BE HAND DUG DUE TO THE PRESENCE OF EXISTING SERVICES.
- AREAS TO BE EXCAVATED SHOULD BE CAT SCANNED PRIOR TO AND AT REGULAR INTERVALS DURING EXCAVATION, TO LOCATE THE PRESENCE OF SERVICES
- WHERE EXCAVATION IS OVER–DUG, BACKFILL AROUND BASES SHALL BE IN MASS CONCRETE.
- MIN. GROUND SAFE BEARING PRESSURE 100kN/m²

BLINDING
- SURFACES TO RECEIVE SHEET OVERLAYS OR CONCRETE TO HAVE 50mm OF BLINDING
- PERMISSIBLE DEVIATIONS ON SURFACE LEVEL: +0 –25mm.

CONSTRUCTION
- CONSTRUCTION JOINT TO BE:
  - PLACED MID WAY BETWEEN BOLLARDS
  - AT MAXIMUM OF 15m CENTRES
- MAXIMUM CLEAR DISTANCE BETWEEN BOLLARDS TO BE 1200mm.

FOR STANDARD REINFORCED CONCRETE DETAILS REFER TO DRAWING Nr. 3918/000/202

THE STANDARD REBAR DESIGN AND CONFIGURATION CAN BE USED UP TO A MAXIMUM SLOPE OF 1:10 OR 6° SLOPE ANGLE. THEREFORE UP TO THIS SLOPE ANGLE THE LINKS DO NOT HAVE TO REMAIN VERTICAL THE ENTIRE REBAR CAGE CAN BE LAID TO A FALL

COPYRIGHT © THIS DRAWING IS APPLICABLE FOR THE SOLE INSTALLATION OF THE PROJECT LISTED IN THE TITLE BLOCK

| REV | DATE | DESCRIPTION | CAD | CH'KD |
|---|---|---|---|---|
| A | 05.11.12 | ISSUED FOR CONSTRUCTION | MDL | APJ |

FRONTIER PITTS

CLIENT

PROJECT

TITLE
VENUS – 219mm DIA. BOLLARD
SHALLOW FOUNDATION DETAILS

| SCALE | DATE |
|---|---|
| AS SHOWN | 30.10.12 |
| DESIGN/CAD: MDL | REVIEWED BY: APJ |

DRAWING NUMBER: 3918/000/201 — REV: A

CONSTRUCTION ISSUE